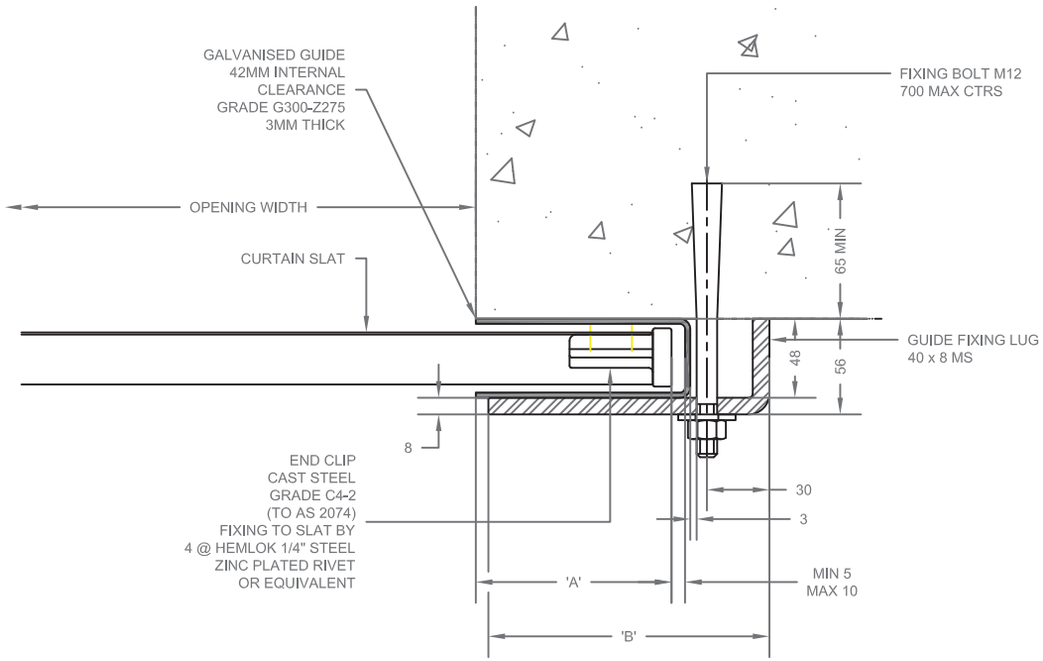
GALVANISED GUIDE
42MM INTERNAL
CLEARANCE
GRADE G300-Z275
3MM THICK
FIXING BOLT M12
700 MAX CTRS
OPENING WIDTH
CURTAIN SLAT
65 MIN
GUIDE FIXING LUG
40 x 8 MS
48
56
8
END CLIP
CAST STEEL
GRADE C4-2
(TO AS 2074)
FIXING TO SLAT BY
4 @ HEMLOK 1/4" STEEL
ZINC PLATED RIVET
OR EQUIVALENT
30
3
'A'
MIN 5
MAX 10
'B'

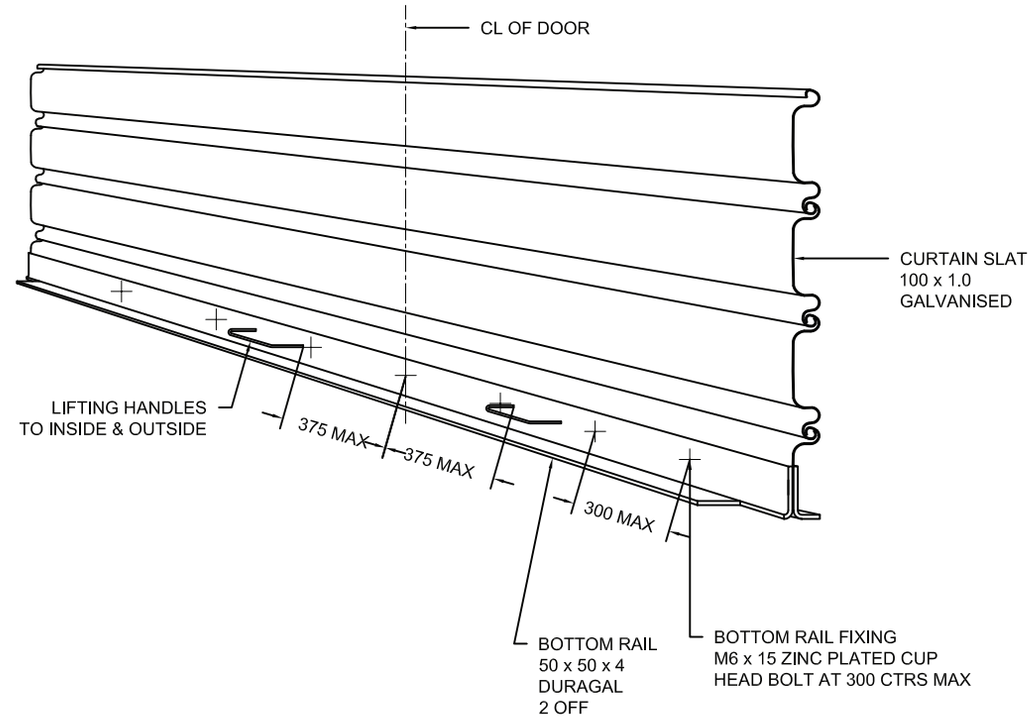
CL OF DOOR
CURTAIN SLAT
100 x 1.0
GALVANISED
LIFTING HANDLES
TO INSIDE & OUTSIDE
375 MAX
375 MAX
300 MAX
BOTTOM RAIL
50 x 50 x 4
DURAGAL
2 OFF
BOTTOM RAIL FIXING
M6 x 15 ZINC PLATED CUP
HEAD BOLT AT 300 CTRS MAX