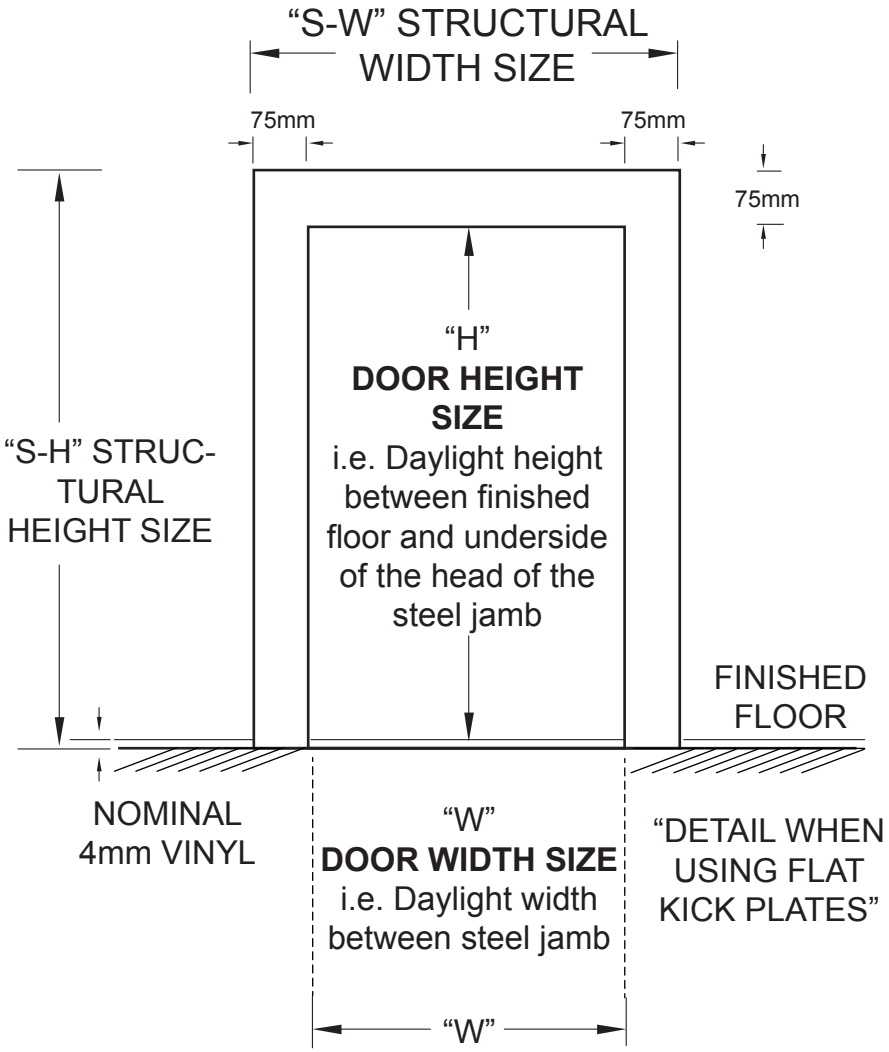

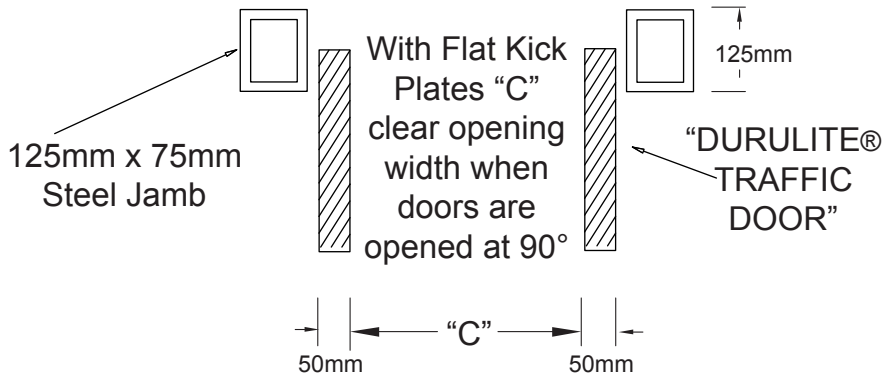
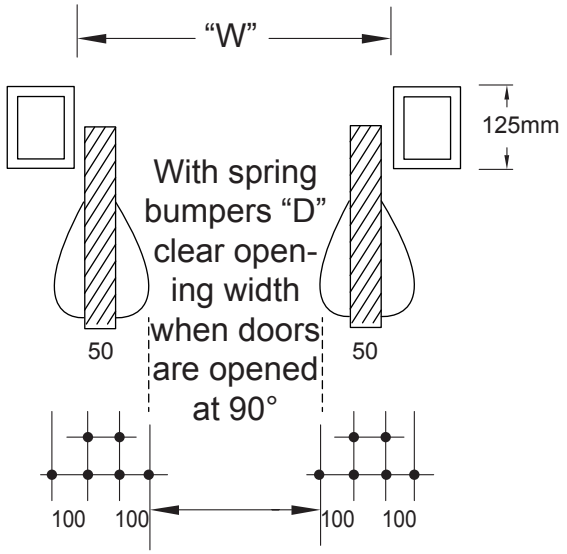
"Detail when using Spring Bumpers (Tear Drop)"